REVISIONS		
Rev	Description	Rev. by
A	1) INITIAL RELEASE	6-8-06

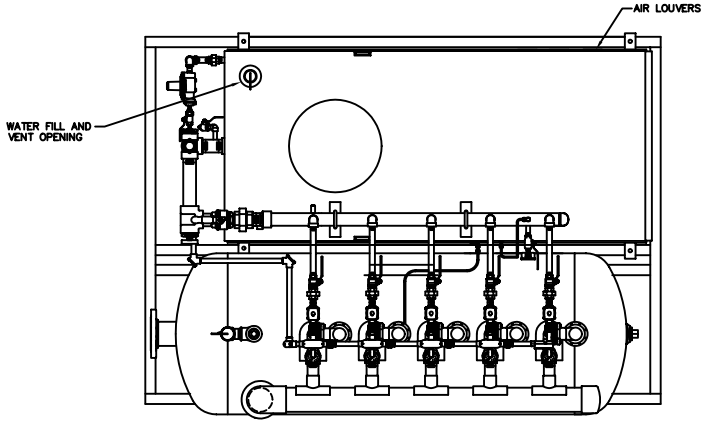

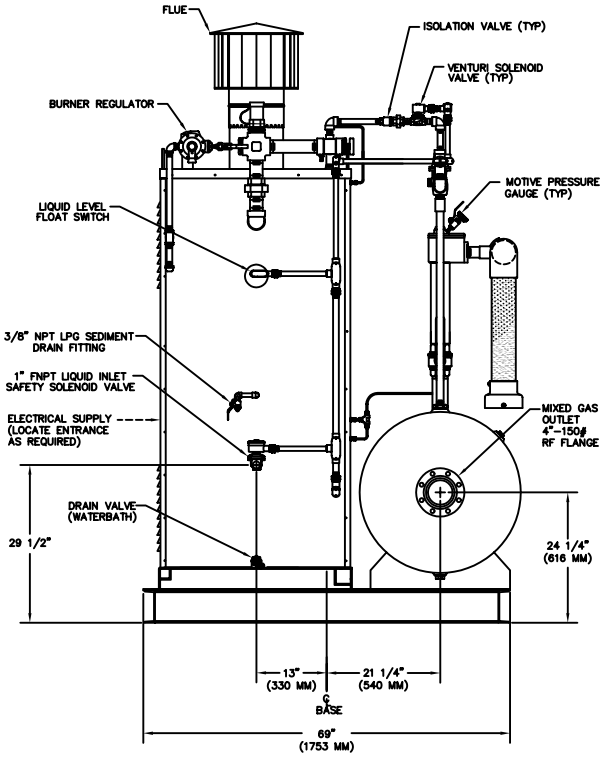

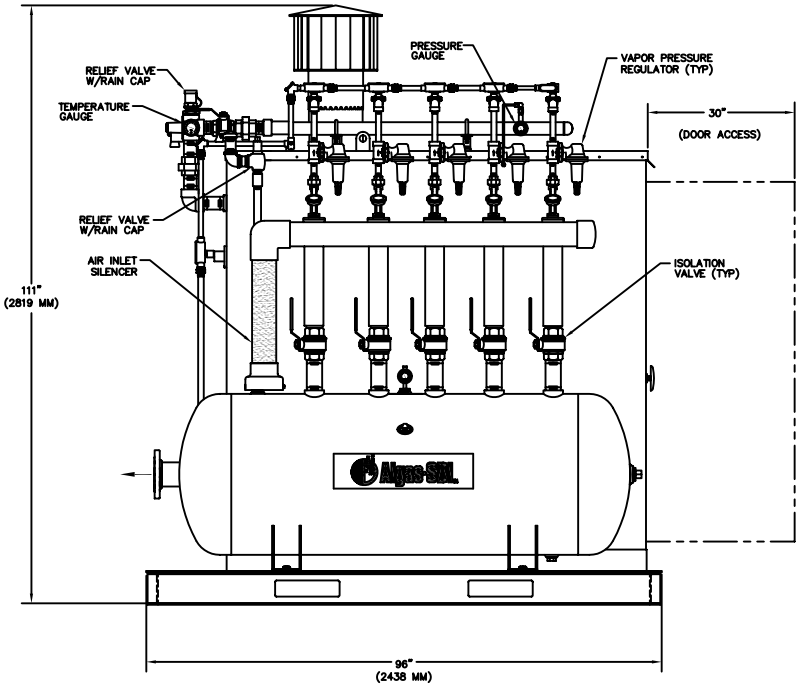

NOTES

- FACTORY MUTUAL APPROVED (FM)
- MEETS OR EXCEEDS NFPA 58 AND 70 REQUIREMENTS
- FOR OUTDOOR INSTALLATION, GENERAL PURPOSE LOCATION
- DESIGN PRESSURE
  HEAT EXCHANGER: MAWP 250 PSIG @ 650°F, MDMT -20°F @ 250 PSIG
  VAPOR INLET: MAWP 250 PSIG @ 650°F
  MIXED GAS TANK: MAWP 50 PSIG @ 650°F
- WATERBATH CAPACITY = 279 U.S. GALLONS
- APPROXIMATE WEIGHT = 4,850 LBS (2,200 KG)
- FREEZE AND CORROSION PROTECTION REQUIRED
- EXTERIOR FINISH: "ALGAS-SDI BLUE" AND BLACK POWDER COAT
- DIMENSIONS SHOWN ±1/4"

MODEL	OUTLET PRESSURE	REQUIRED ACCUMULATOR TANK CAPACITY	CAPACITY BTU/HR
QM65.0 -10	10 PSIG	240 GAL.	65,000,000
QM70.0 -5	5 PSIG		70,000,000
-8	8 PSIG		
-12	12 PSIG		

Algas-SDI
1140 N.W. 46th St., Seattle, Washington, USA 98107
Tel: (206) 789-5410 Fax: (206) 789-5414

Title	PACKAGED VAPORIZING MIXING SYSTEM, MODEL QM65.0 & QM70.0 WITH SKID MOUNTED SURGE TANK		
Drawn By	G. ROPPE	Date	6-8-06
Checked By		Scale	NONE
Approved By		Job No.	A.S.D.I. STD.
Part Number		Dwg. No.	0150-6025
Size	D	Sht. No.	1 of 1
Rev	A		

This drawing is the property of Algas-SDI and is not to be reproduced nor used in any manner detrimental to our interests. All rights are reserved.