REVISIONS		
Rev	Description	Rev. by
A	1) INITIAL RELEASE	8-05-02

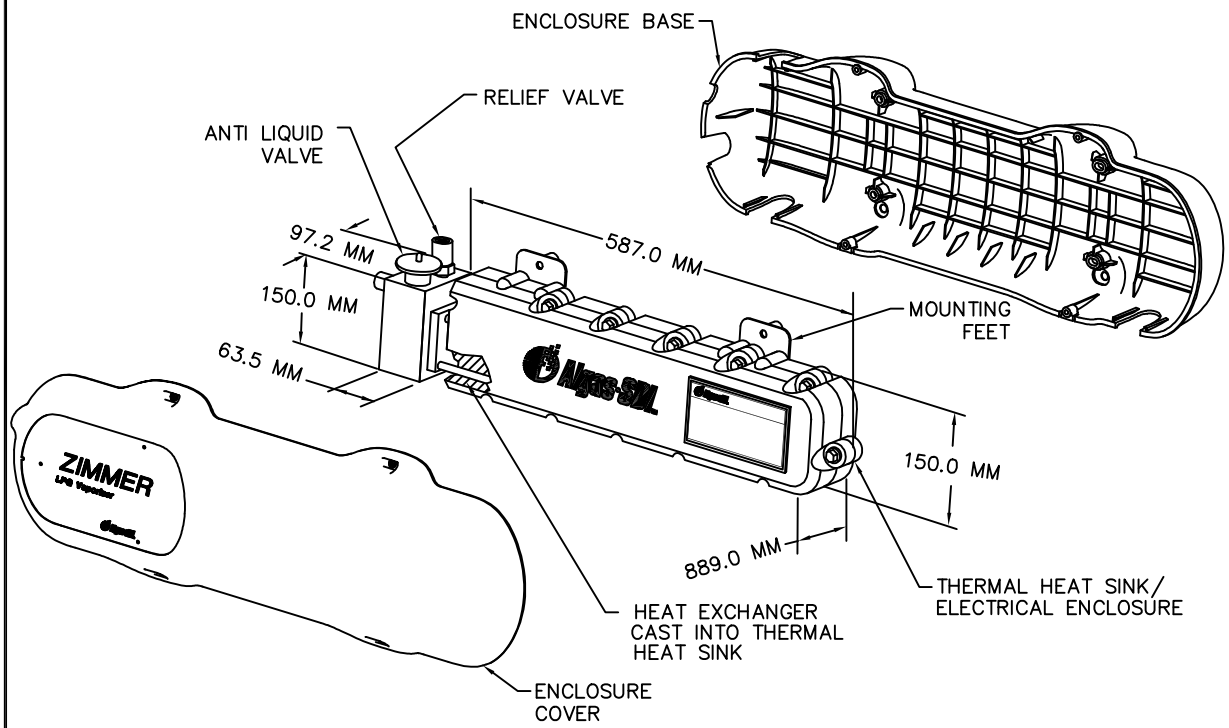

DESIGN CONDITIONS

1. CAPACITY: 40 KG/HR, LPG
2. ELECTRICAL:
   - 120/220/240 VAC, 1PH, 50/60HZ, 3,27/4,68/4,68 KW
   - EEx d I I A T3
   - Ex II 1G
   - CLASS I , DIV. 1, GROUP D, T3C
   - ENCLOSURE – NEMA 3R
3. HEAT EXCHANGER: (TUBING CAST IN THERMAL HEAT SINK)
   - AREA; 1.200 CM^2
   - VOLUME; 311 CM^3
   - MAWP; 17,24 BAR AT 343°C
   - MDMT; –29°C AT 17,24 BAR
   - HYDROSTATIC TEST PRESSURE; 25,86 BAR
   - MATERIAL; SA 214 TUBING, CONFORMS TO ASME SEC. II
   - MATERIAL THICKNESS; 0,889 MM
   - MATERIAL DIAMETER; 12,7 MM
4. THERMAL HEAT SINK/ELECTRICAL ENCLOSURE:
   - CAST ALUMINUM ASTM B–108, GRADE 356.0–T5
5. DESIGN STANDARDS:
   - UL & CUL, DEMKO, DNV, (APPROVALS PENDING)
   - CONFORMS TO THE FOLLOWING;
     - NFPA 58
     - NFPA 70
     - UL 823
     - CSA 22.2 NO. 30–M1989
     - EN 50014
     - EN 50018
     - IEC 60079–0
     - IEC 60079–1
     - UL 50
     - UL 1203
     - NEMA 250
     - 73/23/EEC LOW VOLTAGE DIRECTIVE
     - 89/336/EEC EMC DIRECTIVE
     - 97/23/EC PRESSURE EQUIPMENT DIRECTIVE
     - 94/9/EC ATEX DIRECTIVE
6. RELIEF VALVE:
   - RELIEVING CAPACITY; 7,93 Nm^3 /MIN., AIR
   - SET POINT; 17,24 BAR
   - MODEL; REGO 3127G

Algas-SDI
1140 N.W. 46th St., Seattle, Washington. USA 98107
Tel: (206) 789–5410 Fax: (206) 789–5414

Title	ZIMMER ELECTRIC VAPORIZER – MAJOR ASSEMBLY		
Drawn By G. ROPPE	Date 1–15–02	Dwg. No.	0901-8001
Checked By	Scale NONE		
Approved By	Job No. A.S.D.I. STD.		
Size C	Sht. No. 1 of 1	Rev A	

This drawing is the property of Algas•SDI and is not to be reproduced nor used in any manner detrimental to our interests. All rights are reserved.

Part Number